# 49S78-05190 / 49S78-5300 (Skyline GTR)

| | |
|---|---|
| 49S78-05190 | TD05H-06*18G(8.0cm2) |
| 49S78-05300 | TD05H-06*16G(10.0cm2) |

| Actuator settings (Kpa) | |
|---|---|
| P1 @ 1mm | 100 |
| P2 @ 5mm | 117.3 |

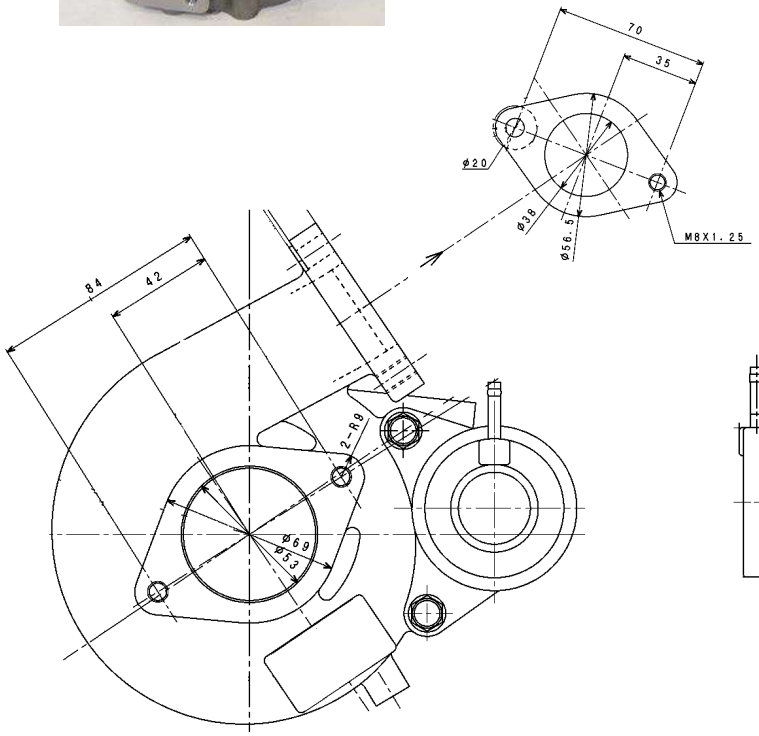


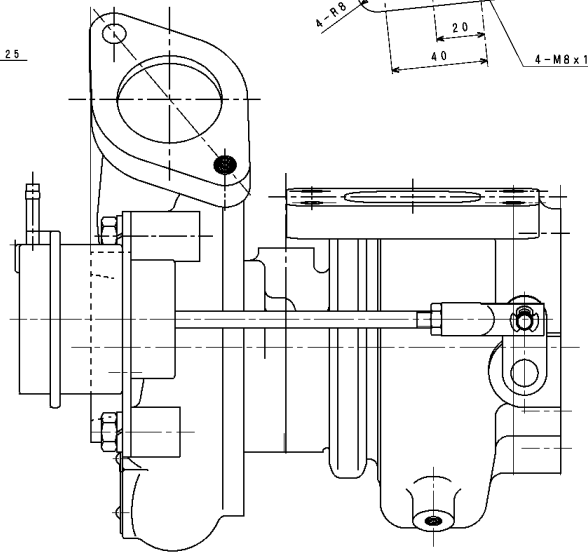

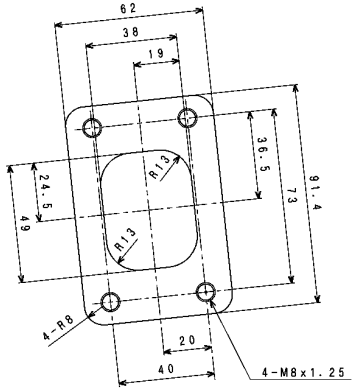

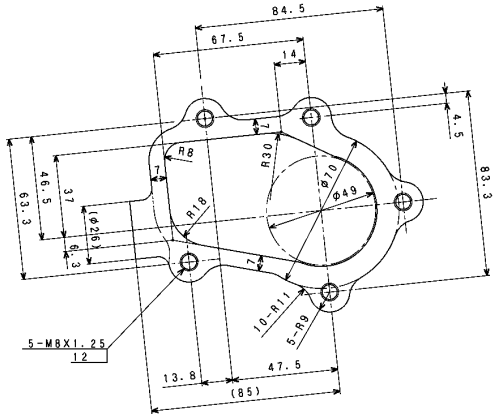


© 2012 MITSUBISHI HEAVY INDUSTRIES, LTD. All Rights Reserved.